BLE MODULE INTERFACING PROTOCOL

DRAFT DOCUMENT

Request/Response Frame

Header		Packet ID	Command	Data Length	Data	Checksum
1	2	3	4	5	6	7

Header – 2 header bytes to identify the start of the frame (0x55,0xAA)

Packet ID – to identify between request and response frames
request – 0x06 and response – 0x07

Command – command to adjust speed, turn OFF/ON, set timer etc

Data Length – length of data bytes in the frame

Data – data byte(s) for the corresponding command

Checksum – checksum byte. Lower byte of the sum of the frame except header

Status Check Frame

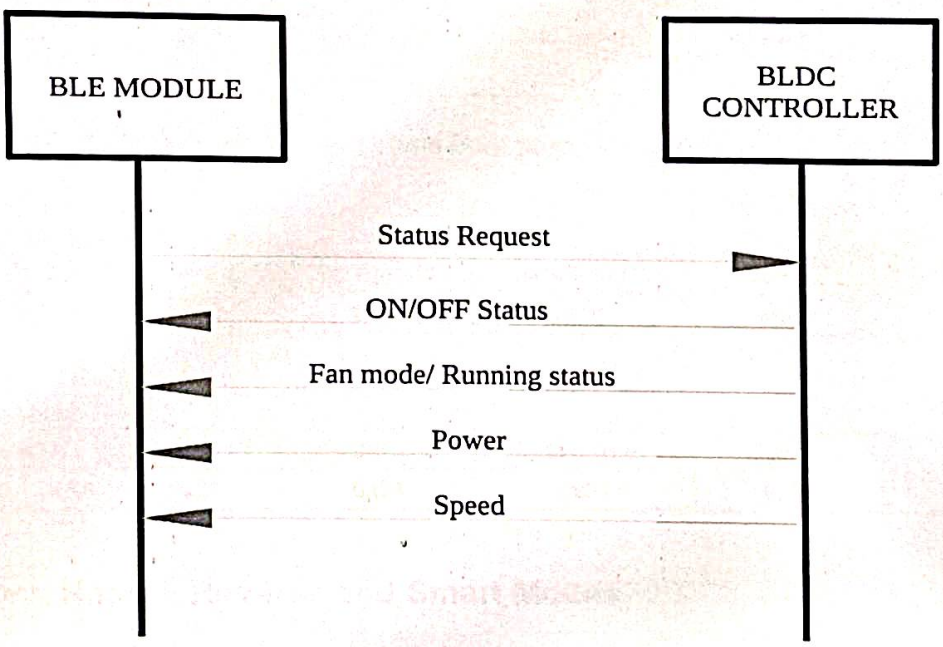

Request frame format

Header		Packet ID	Command	Data Length	Data	Checksum
0x55	0xAA	0x00	0x00	0x01	0x00	0x01

Power ON/OFF:

Request Frame

Header		Packet ID	Command	Data Length	Data	Checksum
0x55	0xAA	0x06	0x02	0x01	YY	Checksum

YY = 0x01 for power ON
0x00 for power OFF

Request Frame for power ON

Header		Packet ID	Command	Data Length	Data	Checksum
0x55	0xAA	0x06	0x02	0x01	0x01	0x0A

Response:

Header		Packet ID	Command	Data Length	Data	Checksum
0x55	0xAA	0x07	0x02	0x01	0x01	0x0B

Speed Steps

Request Frame

Header		Packet ID	Command	Data Length	Data	Checksum
0x55	0xAA	0x06	0x04	0x01	YY	Checksum

YY = 0x01 to 0x06 for the speed steps from step 1 to step 6

eg:
Request Frame for speed 3

Header		Packet ID	Command	Data Length	Data	Checksum
0x55	0xAA	0x06	0x04	0x01	0x03	0x0E

Response:

Header		Packet ID	Command	Data Length	Data	Checksum
0x55	0xAA	0x07	0x04	0x01	0x03	0x0F

Boost, Nature, Reverse and Smart Modes

Request Frame

Header		Packet ID	Command	Data Length	Data	Checksum
0x55	0xAA	0x06	0x21	0x01	YY	Checksum

YY = 0x01 Boost mode
0x02 Nature mode
0x03 Reverse mode
0x04 Smart mode

eg:
Request Frame for Nature mode

Header		Packet ID	Command	Data Length	Data	Checksum
0x55	0xAA	0x06	0x21	0x01	0x02	0x2A

Response:

Header		Packet ID	Command	Data Length	Data	Checksum
0x55	0xAA	0x07	0x21	0x01	0x02	0x2B

Timer Mode

Request Frame

Header		Packet ID	Command	Data Length	Data	Checksum
0x55	0xAA	0x06	0x22	0x01	YY	Checksum

YY = 0x00 Timer OFF
0x02 2hour timer
0x04 4hour timer
0x08 8hour timer

eg:
Request Frame for 4hour timer

Header		Packet ID	Command	Data Length	Data	Checksum
0x55	0xAA	0x06	0x22	0x01	0x04	0x2D

Response:

Header		Packet ID	Command	Data Length	Data	Checksum
0x55	0xAA	0x07	0x22	0x01	0x04	0x2E

Power consumption

Request Frame

Header		Packet ID	Command	Data Length	Data	Checksum
0x55	0xAA	0x06	0x23	0x01	0x00	0x2A

Response:

Header		Packet ID	Command	Data Length	Data	Checksum
0x55	0xAA	0x07	0x23	0x01	Power data	Checksum

Power data – integer number showing power in Watts

Running speed

Request Frame

Header		Packet ID	Command	Data Length	Data	Checksum
0x55	0xAA	0x06	0x24	0x01	0x00	0x2B

Response:

Header		Packet ID	Command	Data Length	Data	Data	Checksum
0x55	0xAA	0x07	0x24	0x01	Speed data high byte	Speed data low byte	Checksum